REV.	ECN NO.	MODIFIED MARK	APPROVED
A	———	FIRST RELEASE	

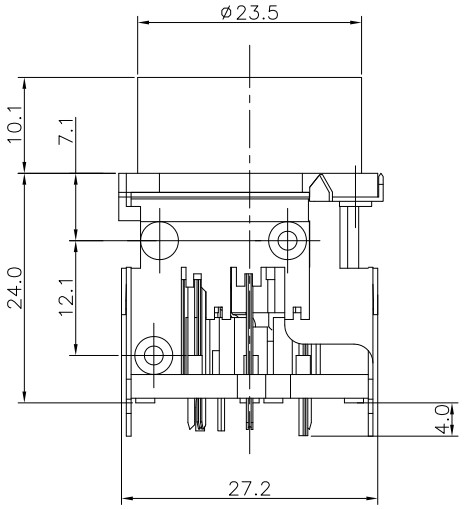

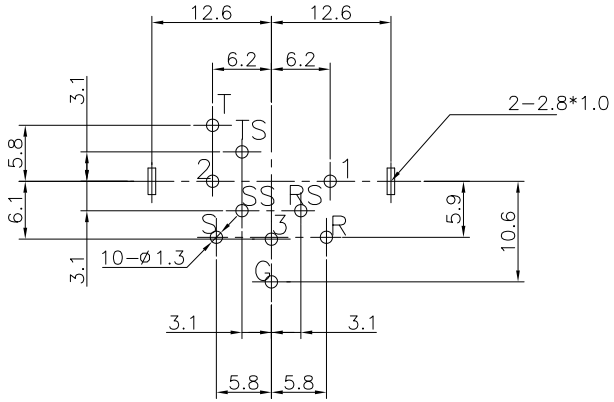

PCB LAYOUT
TOP VIEW

NOTES:
ELECTRICAL:
1:RATED CURRENT: 7.5 A MAX.
2:RATED VOLTAGE: 50 V AC.
3:CONTACT RESISTANCE: XLR:30 MILLIOHMS MAX.
JACK:30 MILLIOHMS MAX.
4:INSULATION RESISTANCE: 1 G OHMS MIN.
5:DIELECTRIC WITHSTANDING VOLTAGE: 500 VAC MIN.
MECHANICAL:
1:INSERTION FORCE: 5N~40N
2:WITHDRAWAL FORCE: 5N~40N.
4:DURRABILITY: 1000 CYCLES.
ENVIRONMENTAL:
TEMPERATURE RANGE: -30°C TO 80°C.

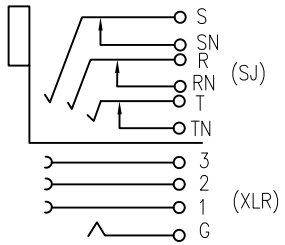

SCHEMTIC

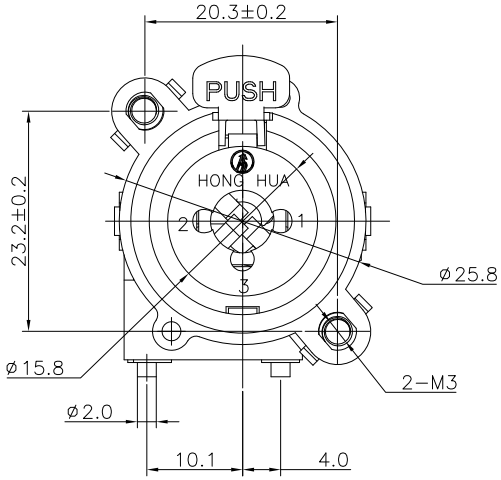

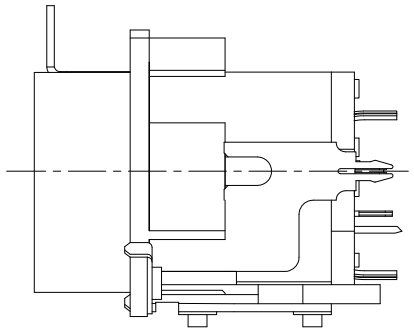

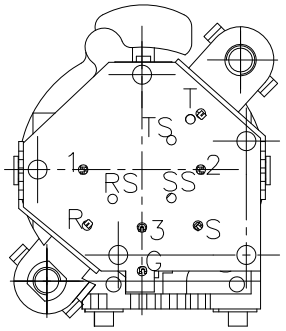

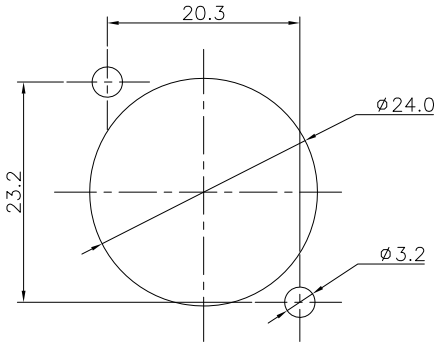

PANEL CUT OUT

ANGLE	±5°
63 < L	±0.5
16 < L ≤ 63	±0.4
4 < L ≤ 16	±0.3
L ≤ 4	±0.2

TOL TABLE:

THIS DOCUMENT IS THE PROPERTY OF TRENPRO TECHNOLOGY CO. LTD. ,NO PART THEREOF MAY BE REPRODUCED AND USED WITHOUT THE PRIOR WRITTEN CONSENT OF THE OWNER

MODEL NAME: (PART NO.) SPC-06B-10P

广东正宝科技有限公司
GUANGDONG TRENPRO TECHNOLOGY CO. LTD.

MAT'L: See table	DESIGN: X.H.Wang 09/19'18	TITLE: XLR CABLE CONNECTORS			
FINISH: See table	CHECKED: L.W.Wu 09/19'18	DWG NO.:			REV.: A
Q'TY:/	APPROVED: X.Q.Hu 09/19'18	UNIT: mm	VIEW:	SCALE: 5:1	SHEET: 1/1	SIZE: A3